TABLE OF CONTENTS

1 GENERAL/INTRODUCTION 4
1.1 Purpose 4
1.2 Component/Commodity Description 4
1.3 Application 4
1.4 Hazardous Material Control 4
1.5 Mandatory, Recommended or Specified Tests 4
1.6 Test Planning 4
1.7 Suggested, Recommended or Specified Components and/or Suppliers 4
2 REFERENCES 5
2.1 S Internal Standards 5
2.2 S External Standards 5
2.3 Regulations 6
2.4 Additional / Other documents 6
3 DEFINITIONS/ABBREVIATIONS/ACRONYMS/SYMBOLS 6
4 SPECIAL TEST EQUIPMENT 7
5 ENVIRONMENTAL REQUIREMENTS 7
5.1 EE/ EM - Component Specific Test Requirements 7
5.2 Resistance to Corrosion 10
5.3 Resistance to Fluids in Engine Compartment 10
6 APPEARANCE / PHYSICAL / MECHANICAL / ELECTRICAL REQUIREMENTS 11
6.1 Appearance Requirements 11
6.2 Physical Requirements 11
6.2.1 Material Requirements 11
6.2.2 Dimensional Requirements 11
6.3 Mechanical Requirements 12
6.3.1 Buzz, Squeaks and Rattle 12
6.3.2 NVH requirements 12
6.3.3 Part Identification and Marking 12
6.4 Electrical Requirements 12
6.4.1 Wiring Requirements 13
6.4.2 Connector Requirements 13
6.4.3 Electrical interface Requirements 14
6.4.4 Electrical System Compatibility Requirements 14
6.4.5 Electromagnetic Compatibility (EMC) Requirements 14
6.4.6 Resistance to Electrolysis of Water-In-Fuel Probe 15
6.4.7 Dimensional Check of Fuel Fittings 15
6.4.8 Water-in-Fuel Signal Level 15
6.4.9 Heater Shut Off Test (Automated Heater) 16
6.4.10 Functionality of the Electric Heater 17
6.4.11 Other requirements 19
6.4.12 EMC/RFI/EMI performance requirements 19
6.4.13 Mechanical and environmental performance requirements 19
7 FUNCTIONAL REQUIREMENTS 19
7.1 Filtering Efficiency 19
7.2 Filter Efficiency - Single Pass Particle Retention 20
7.3 DHC (Dust Holding Capacity) 20

7.4 Outwards Sealing <D> 21
7.4.1 Sealing Test with Air 21
7.4.2 Sealing Test with Fuel 21
7.5 Seal of Filtering Element Gasket on Dirt / Clean Sides 22
7.6 Inner Seal Between Dirt Side/Clean Side (Bubble-Test) 22
7.7 Pressure drop on new product 22
7.8 Filter Cleanliness 23
7.9 Filter Element Collapse Test 24
7.10 Burst Test 24
7.11 Fuel Fitting Torque Test 24
7.11.1 Metal Fitting Press Fit to Housing 25
7.11.2 Plastic Molded Fittings 25
7.12 Water Separation Efficiency 25
7.13 Functionality of Filter Assembly at Cold Condition 25
7.14 Resistance of Filter Assembly at Cold Condition with Presence of Paraffin 27
7.15 Tightening Torque of new Threaded Elements 27
7.16 Electrostatic Charge Resistance Test 27
7.17 Emulsified Water Separation Test 27
7.18 Thermostatically Controlled Heater On/Off Test (Automated heater) 28
7.19 Functionality of NTC Temperature Sensor 29
7.20 Fuel Temperature Measurement Accuracy Test (With NTC Sensor) 31
7.21 Functionality of Water in Fuel Sensor 32
8 SAFETY AND REGULATORY REQUIREMENTS<S> 34
9 RELIABILITY / DURABILITY REQUIREMENTS<S> 34
9.1 System and Vehicle Level Requirement 34
9.2 Design Failure Modes and Effects Analysis (DFMEA) 34
9.3 Resistance to Thermal Cycles 35
9.4 Resistance to Pulsating Pressure 35
9.5 Resistance to Vibrations 36
9.6 Resistance to Fuels (Dynamic Ageing) 37
9.7 Heater Life Cycle Test (Automated heaters) 37
10 PRODUCT ASSURANCE 39
11 WARRANTY RETURNED PARTS TEST AND ANALYSIS PROCEDURES 39
12 ADDITIONAL CONTACTS 39
13 RELEASE AND REVISIONS 39
Annex A 40
Annex B 44

1 GENERAL/INTRODUCTION

1.1 Purpose

This standard covers the environmental, physical, electrical, mechanical, functional, regulatory and durability requirements for Diesel Fuel Filters for Injection Engines.

1.2 Component/Commodity Description

This specification can be applied to filters for systems with working pressure range from 0 to 700 [kPa] - 0 to 101.5 [psi]

1.3 Application

This standard is limited in its application to those CAD files, drawings or engineering illustrations which call out this standard number or refer to this standard within some other standard or specification.

1.4 Hazardous Material Control

Products and processes used to manufacture the products listed in this standard must conform to the employee and consumer health, employee safety, regulated substances, recycling and environmental reporting requirements.

1.5 Mandatory, Recommended or Specified Tests

Mandatory or suggested tests if any provided within this standard are meant to assure compliance to the specification but do not relieve the responsible entity from ensuring that the component or system meets all environmental, physical, electrical, mechanical, functional, regulatory and durability requirements including all applicable system interface requirements as described in the standard for the entire duration of specified useful life.

1.6 Test Planning

A test plan (DVP&R) shall be developed to verify and validate all required functions specified in this standard. The responsible entity shall provide any additional testing that's deemed necessary to meet functional requirements; the tables at the end of this document provide summary of all the requirements and shall be used to develop the test planning.

Samples utilized for Design Verification (DV) shall meet specified drawings tolerance range. Samples for Production Validation (PV) shall meet statistical capabilities for machine and manufacturing processes.

Where necessary, each line item of the test plan (DVP&R) must be supported by a comprehensive test or laboratory procedure. A test plan (DVP&R) agreement by S does not relieve the responsible entity from ensuring that the component or system meets all environmental, physical, electrical, mechanical, functional, regulatory and durability requirements including all applicable system interface requirements, in the entity's area of responsibility, as described in the standard for the specified useful life.

1.7 Suggested, Recommended or Specified Components and/or Suppliers

Suggested, recommended or specified components and/or suppliers, if any, are still required to comply to the specification and do not relieve the responsible entity from ensuring that the component or system

utilizing these suggested, recommended or specified components and/or suppliers meets all environmental, physical, electrical, mechanical, functional, regulatory and durability requirements including all applicable system interface requirements, in the entity's area of responsibility, as described in the standard for the specified useful life.

2 REFERENCES

2.1 S Internal Standards

Table 1 - References

Document Number	Shield/Designator (if applicable)	Document Title	downloadable for suppliers
01552_16_03847		ELECTRICAL REQUIREMENTS - P PG CT	Y
7.N0007		COMPONENTS FOR VEHICLE INTERIOR/EXTERIOR TRIMS OFF-VEHICLE NOISE	Y
CEP-042		WIRING, DEVICE CONNECTOR SELECTION REQUIREMENTS	Y
CS.00050		WIRING DESIGN AND PACKAGE REQUIREMENTS	Y
CS.00056		ENVIRONMENTAL SPECIFICATION FOR ELECTRICAL / ELECTRONIC (E/E) COMPONENTS.	Y
CS.00244		S ELECTRICAL AND EMC PERFORMANCE REQUIREMENTS FOR EE COMPONENTS - 01446_23_00323 (S HARMONIZED)	Y
CS.00251		CORROSION REQUIREMENTS - VEHICLE SYSTEMS AND COMPONENTS - 01446_23_00691(S HARMONIZED)	Y
DS-107		BSR DESIGN GUIDELINES	Y
DS-158		ERGONOMICS PROCESS DRIVEN DESIGN STANDARD	Y
FPW.55520/01		DIESEL OIL FOR DIESEL ENGINES.	Y
FPW9.55535		OTTO CYCLE AND DIESEL ENGINES LUBRICANTS.	N
LP.7R011		SYSTEM LEVEL NVH FUEL PUMP NOISE ASSESSMENT	Y
MS.90039		BRAKE FLUID - DOT 3, DOT 4.	Y
MS-10756		FUEL - ULTRA LOW SULFUR DIESEL - EMISSIONS CERTIFICATION TEST FUEL	Y
MS-11182		FUEL - DIESEL - ULTRA LOW SULFUR CONTAINING 20% BIODIESEL - TEST FUEL	Y
PF.90012		STANDARD FOR AUTOMOTIVE ELECTRICAL CONNECTION SYSTEMS	Y
PF.90303		WIRING HARNESS - ASSEMBLY PERFORMANCE	Y
PF-SAFETY	<S>	PRODUCT SAFETY - USE OF THE SAFETY FLAG / SAFETY SHIELD	Y
PS-11346		WARRANTY RETURNED PARTS TESTING AND ANALYSIS PROCEDURES	Y
PS-7300	<D>	PRODUCT QUALITY - USE OF DIAMONDS	Y
QR.00001		GLOBAL PRODUCT ASSURANCE TESTING (GPAT)	Y
QR-10012		DIMENSIONAL QUALITY REQUIREMENTS	Y
SD-12219		EE INTERFACE CHECKLIST	Y

2.2 S External Standards

Reference	Title
ASTM D971	STANDARD TEST METHOD FOR INTERFACIAL TENSION OF INSULATING LIQUIDS AGAINST WATER BY THE RING METHOD
EN14214	AUTOMOTIVE FUELS - FATTY ACID METHYL ESTERS (FAME) FOR DIESEL ENGINES - REQUIREMENTS AND TEST METHODS.
EN590	AUTOMOTIVE FUELS - DIESEL - REQUIREMENTS AND TEST METHODS.
ISO 12103	ROAD VEHICLES - TEST DUST FOR FILTER EVALUATION
ISO 16332	DIESEL ENGINES -- FUEL FILTERS -- METHOD FOR EVALUATING FUEL/WATER SEPARATION EFFICIENCY.
ISO 19438	DIESEL FUEL AND PETROL FILTERS FOR INTERNAL COMBUSTION ENGINES.
ISO 2942	HYDRAULIC FLUID POWER - FILTER ELEMENTS - VERIFICATION OF FABRICATION INTEGRITY AND DETERMINATION OF THE FIRST BUBBLE POINT
ISO 4020	ROAD VEHICLES -- FUEL FILTERS FOR DIESEL ENGINES -- TEST METHODS.
ISO 4113	ROAD VEHICLES — CALIBRATION FLUIDS FOR DIESEL INJECTION EQUIPMENT
SAE J1645	FUEL SYSTEM--ELECTROSTATIC CHARGE.

Reference	Title
SAE J2044	QUICK CONNECT COUPLING SPECIFICATION FOR LIQUID FUEL AND VAPOR/EMISSIONS SYSTEMS
SAE J2334	LABORATORY CYCLIC CORROSION TEST
SAE/USCAR-2	PERFORMANCE SPECIFICATION FOR AUTOMOTIVE ELECTRICAL CONNECTOR SYSTEMS
SAE/USCAR-21	PERFORMANCE SPECIFICATION FOR CABLE-TO-TERMINAL ELECTRICAL CRIMPS
SAE/USCAR-25	ERGONOMICS SPECIFICATION FOR ELECTRICAL CONNECTIONS

2.3 Regulations

Reference	Title
N/A	

2.4 Additional / Other documents

Reference	Title
N/A	

3 DEFINITIONS/ABBREVIATIONS/ACRONYMS/SYMBOLS

BICEEPR&U	Body, Interior, Chassis, Electrical, Engine System, Powertrain, Restraints & UConnect
BSR	Buzz, Squeak and Rattles
CAD	Computer Aided Design
Continuing Conformance (Pre-Capability)	Continuing conformance tests are used to demonstrate process compliance and must be completed using production castings, tooling, and processes. Continuing conformance tests are to be done at the specified frequency, until process capability or confidence is demonstrated per the defined test criteria. Continuing conformance tests are to be conducted at the specified frequency, for a minimum of three production days, or nine production runs, whichever is more stringent.
Continuing Conformance (Post-Capability)	Post capability continuing conformance test program may be implemented after successful completion of the continuing conformance requirements. Tests must be completed with production parts on a continuing basis. Samples for these tests must be selected on a random basis to represent the entire production population as much as possible. In the event that any portion of these tests is not met, the reaction plan specified in the Supplier control plan shall be invoked.
CMVSS	Canadian Motor Vehicle Safety Standards
CTS	Customer Technical Specification
DV	Design Validation
DVP&R	Design Verification Plan & Report
DFMEA	Design Failure Mode and Effect Analysis
ECE	Economic Commission for Europe
ECU	Engine Control Unit
EE	Electrical/ Electronics
EM	Electro-Mechanical
S	F CAutomobiles
S US LLC	Used to be CGroup LLC
S Italy S.p.A.	Used to be F Group Automobiles S.p.A.
exS	Former S
exS US	Former S US

exS Italy	Former S Italy
FMVSS	Federal Motor Vehicle Safety Standards
HTHE	High Temperature and Humidity Endurance
HTOE	Temperature Operating Endurance
LTOE	Low Temperature Operating Endurance
NTC	Negative Temperature Coefficient
NVH	Noise, Vibration and Harshness
PC	Product Card
PLM	Product LifeCycle Management
PV	Product Validation
PPAP	Production Part Approval Process
PSI	Integrated Test Plan (Piano Sperimentale Integrato)
PTCE	Powered Thermal Cycle Endurance
QRE	Quality & Reliability Engineer/ Engineering
SSTE	Shipping / Storage Temperature Exposure
THC	Thermal Humidity Cycle
TFO	F Design and Organization Procedures
TS	Thermal Shock

4 SPECIAL TEST EQUIPMENT

Not applicable

5 ENVIRONMENTAL REQUIREMENTS

5.1 EE/ EM - Component Specific Test Requirements

Component testing shall be based on the standard **CS.00056** “ENVIRONMENTAL SPECIFICATION FOR ELECTRICAL / ELECTRONIC (E/E) COMPONENTS” or **01552_16_03847**, according to the region of development.

Perform tests per **Annex B - Recommended Test Flow** for components using the **CS.00056.** See Annex B to determine when functional tests are to be provided. Functional tests include referenced **CS.00056** sections, and this specification sections 6.4.10 Functionality of Electric Heater, 6.4.8 Water-in-Fuel Signal Level, 6.4.9 Heater Shut Off Test (Automated Heater), 7.4 Outwards Sealing, 7.7 Pressure drop on new product, 7.12 Water Separation Efficiency at cold condition, 7.18 Thermostatically Controlled Heater On/Off Test (Automated heater), 7.19 Functionality of NTC Temperature Sensor, 7.20 Fuel Temperature Measurement Accuracy Test (With NTC Sensor), and 7.21 Functionality of Water in Fuel Sensor.

Table 2 - Applicable Environmental Conditions (As reference only)

APPLICABLE ENVIRONMENTAL CONDITIONS	PARAMETERS	TEST DURATION	ACCEPTANCE CRITERIA
A. Climatic Stresses:			
5.1.1 Thermal Shock (TS)	Tmax and Tmin 125 and -40 [°C] 257 and - 40 [°F]	500 cycles (**CS.00056**)	Refer to **CS.00056** for Applicable Tests/ Requirements, and functional tests as referenced 5.1 A.

Table 2 - Applicable Environmental Conditions (As reference only)

APPLICABLE ENVIRONMENTAL CONDITIONS	PARAMETERS	TEST DURATION	ACCEPTANCE CRITERIA
5.1.2 Powered Thermal Cycle Endurance (PTCE)	Top.max and Top.min 125 and -40 [°C] 257 and - 40 [°F]	500 cycles (**CS.00056**)	Refer to **CS.00056** for Applicable Tests/ Requirements, and functional tests as referenced 5.1 A.
5.1.3 High Temperature Operating Endurance (HTOE)	Top.max 125 [°C] 275 [°F]	1300 hours (**CS.00056**)	Refer to **CS.00056** for Applicable Tests/ Requirements, and functional tests as referenced 5.1 A.
5.1.4 High Temperature and Humidity Endurance (HTHE)	Temp and %RH 85 [°C] & 85% RH 185 [°F] and 85 % RH	1000 hours (**CS.00056**)	Refer to **CS.00056** for Applicable Tests/ Requirements, and functional tests as referenced 5.1 A.
5.1.5 Shipping/ Storage Temp. Exposure (SSTE)	SSTE conditions -40 to 95 [°C] - 40 to 203 [°F]	54 hours (**CS.00056**)	Refer to **CS.00056** for Applicable Tests/ Requirements, and functional tests as referenced 5.1 A.
5.1.6 Low Temperature Operating Endurance (LTOE)	Top.min -40 [°C] -40 [°F]	48 hours (24 cycles) (**CS.00056**)	Refer to **CS.00056** for Applicable Tests/ Requirements, and functional tests as referenced 5.1 A.
5.1.7 Thermal Humidity Cycle (THC)	10 to 65 [°C] 14 to 149 [°F]	240 Hours between -10 °C and 65 C/ 93% RH (Intermittent Operation)	Refer to **CS.00056** for Applicable Tests/ Requirements, and functional tests as referenced 5.1 A.
Solar Radiation Soak	Not Applicable	Not Applicable	
B. Mechanical Stresses:			
Device Restraint Performance	Not Applicable	Not Applicable	
5.1.8 Vibration	Tmax/ Tmin & Vibration Class 125 [°C] / -40[°C] 257 [°F] / -40 [°F] Class V2	**CS.00056** Mechanical Vibration and this spec: 10.5 Resistance to Vibrations	Refer to **CS.00056** for Applicable Tests/ Requirements, and functional tests as referenced 5.1 A.
5.1.9 Mechanical Shock	Room Temperature	500 cycles Refer to **CS.00056**	Refer to **CS.00056** for Applicable Tests/ Requirements, and functional tests as referenced 5.1 A.
Mechanical Shock Endurance	Not Applicable	Not Applicable	
5.1.10 Handling Drop		1 meter drop/axis - Total 6 drops	Refer to **CS.00056** for Applicable Tests/ Requirements, and functional tests as referenced 5.1 A.
Mechanical Operational Durability	Not Applicable	Not Applicable	

Table 2 - Applicable Environmental Conditions (As reference only)

APPLICABLE ENVIRONMENTAL CONDITIONS	PARAMETERS	TEST DURATION	ACCEPTANCE CRITERIA
5.1.11 Gravel Bombardment		Gravel Bombardment Applicable (non-operational)	Refer to **CS.00056** for Applicable Tests/ Requirements, and functional tests as referenced 5.1 A.
C. Dust/ Water Intrusion:			
5.1.12 Dust Intrusion	IP Category 1P6K9K	1 day (**CS.00056**)	Refer to **CS.00056** for Applicable Tests/ Requirements, and functional tests as referenced 5.1 A.
5.1.13 Water or Steam Intrusion	IP Category 1P6K9K	1 day (**CS.00056**)	Refer to **CS.00056** for Applicable Tests/ Requirements, and functional tests as referenced 5.1 A.
5.1.14 Salt Water Immersion	IP Category 1P6K9K	20 cycles (**CS.00056**)	Refer to **CS.00056** for Applicable Tests/ Requirements, and functional tests as referenced 5.1 A.
5.1.15 Mud Resistance		66 hours - Operational	Refer to **CS.00056** for Applicable Tests/ Requirements, and functional tests as referenced 5.1 A.
D. Chemical Exposure:			
5.1.16 Salt Fog	Room Temperature	168 Hours - Intermittent Operation Reference, Section 5.2 of this Specification	Refer to **CS.00056** for Applicable Tests/ Requirements, and functional tests as referenced 5.1 A.
5.1.17 Mixed Flowing Gas	Room Temperature	14 Days - Operational	Refer to **CS.00056** for Applicable Tests/ Requirements, and functional tests as referenced 5.1 A.
5.1.18 Chemicals Exposure		Reference Section 5.3 of this Specification	Refer to **CS.00056** for Applicable Tests/ Requirements, and functional tests as referenced 5.1 A.
E. Other Requirements:			
5.1.19 EMC - Component	Section 6.4.5 of this Specification	Refer to **CS.00056**	Refer to **CS.00056** for Applicable Tests/ Requirements, and functional tests as referenced 5.1 A.
5.1.20 EE System - Component		EE System - Component Requirement Applicable	Refer to **CS.00056** for Applicable Tests/ Requirements, and functional tests as referenced 5.1 A.

Table 2 - Applicable Environmental Conditions (As reference only)			
APPLICABLE ENVIRONMENTAL CONDITIONS	**PARAMETERS**	**TEST DURATION**	**ACCEPTANCE CRITERIA**
5.1.21 Connector & Wiring	Sections 6.4.1-6.4.2 of this specification	Applicable Connector & Wiring Requirements	Refer to **CS.00056** for Applicable Tests/ Requirements, and functional tests as referenced 5.1 A.
5.1.22 Solder Evaluation	Section 5.1.4 from **CS.00056**	Refer to **CS.00056**	Refer to **CS.00056** for Applicable Tests/ Requirements, and functional tests as referenced 5.1 A.

5.2 Resistance to Corrosion

Purpose:

This standard describes corrosion-related functional and appearance objectives for component.

Procedure:

A. Perform the test according to **CS.00251** standard whose duration is 180 cycles.
B. Test per **SAE J2334**, Immersion Method.

Acceptance criteria:

- After 30 cycles test check:
  - Filter integrity and no corrosion after visual inspection (according to under hood appearance) and
  - Absence of rust on metal parts.

- At the end of the 180 cycles test no loss of function filter integrity:
  - Outwards sealing,
  - Functionality of the electric heater,
  - Functionality of the NTC temperature sensor,
  - Functionality of the water in fuel sensor,
  - Residual tightening torque of threaded elements on filter and
  - Fuel fitting torque test.

5.3 Resistance to Fluids in Engine Compartment

Purpose:

This test to check mechanical and functional behavior of filter with several fluids.

Test to be performed for filter assembled in engine compartment: for different positioning, refer to the CTS.

Procedure:

A. Stabilize the filter (with all couplings closed) for 24 h at 80 ± 2 [°C] – 176 ± 35.6 [°F]

B. Immerse the filter in the following fluids for 1 min:

- liquid for engine washing (5% KOH + 25% K2CO3 + 70% H2O) at 23 ± 2 [°C] – 73.4 ± 35.6 [°F];
- ASTM 3 engine oil (Proc. Spec. **FPW9.55535** – Class D2) at 80 ± 2 [°C] - 176 ± 35.6 [°F];
- brake fluid (Proc. Spec. **MS.90039** Class DOT 3, DOT 4) at 80 ± 2 [°C] - 176 ± 35.6 [°F];
- engine cooling liquid (50% mono-ethylene + 50% H2O) at 80 ± 2 [°C] - 176 ± 35.6 [°F];
- battery liquid at 50 ± 2 [°C] – 122 ± 35.6 [°F].

C. Put the filter in the oven for 22 h at 110 ± 2 [°C] – 230 ± 35.6 [°F].

Acceptance criteria:

At the end of the test check:

- filter integrity (visual inspection);
- functionality of the electric heater;
- functionality of the NTC temperature sensor;
- functionality of the water in fuel sensor;
- absence of red rust on metal parts;
- residual tightening torque of threaded elements on filter;
- visually that the marks on the filter can be read easily

6 APPEARANCE / PHYSICAL / MECHANICAL / ELECTRICAL REQUIREMENTS

6.1 Appearance Requirements

The Diesel Filter shall be free from cracks/fractures, missing portions, discolorations, stress marks, dents, misformed cross sections, scratches and/or any unreasonable wear after any test within this specification."

6.2 Physical Requirements

Supplier shall demonstrate dimensional capability for all key dimensional characteristics, identified on CAD files, during DV and PV phases including physical interface requirements e.g.: Fastening points; Interface constraints; Interface materials etc.

6.2.1 Material Requirements

All materials per drawing, must conform to applicable S materials spec. and be accepted by S engineering.

6.2.2 Dimensional Requirements

The Diesel Filter shall meet the **dimensional requirements specified in the released engineering drawing** and shall adhere to the procedures and guidelines identified in **QR-10012**, Dimensional Quality Requirements.

6.3 Mechanical Requirements

6.3.1 Buzz, Squeaks and Rattle

Anti-rattle devices shall be employed where necessary to prevent all BSR. This shall be specifically documented during mechanical vibration testing at the component level. Noise level shall be evaluated with the component assemblies mounted in the appropriate vehicle location.

The BSR requirements shall be checked per **7.N0007** "FINISH COMPONENTS VEHICLE INTERNAL/EXTERNAL PROTECTIONS or **DS-107** "BSR DESIGN GUIDELINES".

6.3.2 NVH requirements

The noise requirements to check with the Standard **LP.7R011** "Electric equipment - Measurement of fuel supply unit noise level".

Acceptance Criteria:

- Minimum oF8 subjective rating for jury evaluation per Table 3.
- 25 decibel maximum and 3 decibels less than vehicle system noise for anechoic chamber evaluation.

Table 3 - NVH Subjective Rating Scale

Rating Scale	Rating Description	Condition Description
10	Perfect. Undetectable.	Subjectively undetectable.
9	Perceptible if looking for condition.	Observer tuned in and looking for condition
8	Exceptional. Low enough not to notice.	Condition likely to be detected by only a few perceptive customers
7	Good, noticed by critical customers but not a problem.	Customer seldom aware of condition.
6	Acceptable, noticed but not felt annoying.	Customer often aware of condition, do not consider it a problem.
5	Borderline annoying.	Condition borders on being annoying
4	Poor. Annoying but usually tolerated.	Condition annoying and correction desired
3	Bad. Intolerable.	Unacceptable and must be fixed. Definite warranty issue.
2	Ridiculous	Ridiculous.
1	Frightening	Painful or destructive.

6.3.3 Part Identification and Marking

All components/assemblies installed on S motor vehicles as original equipment, spare parts or accessories must be marked to identify the component as "GENUINE" and express brand image and "DISTINCTIVENESS" e.g.: F / C / Mopar Trademark; Part number; Recycle mark, Material abbreviation; Supplier number etc.)

6.4 Electrical Requirements

Table of parameters according to **CS.00056** will be provided in the Product Card, based on the specific component and application, or reference **01552_16_03847**, according to the region of development.

Example of classification according to **CS.00056**

Table 4 - Device Classification			
Description	**Classification**		
Device	**Heater**	**Water in Fuel sensor**	**Temperature Sensor**
Device type	E2 / E3	E2 / E3	E2 / E2-S
Functional classification	FC1	FC1	FC1/ FC2
Installation-based classification	CI1 / CI4	CI1 / CI4	CI1 / CI4
Environmental temperature classification (Max Temp)	TC3	TC3	TC3
Environmental temperature classification (Min Temp)	TN1	TN1L (-30)	TN1
Vibrational classification	V2	V2	V2
Weight Classification	W3 / W4 / W5		
Power supply voltage classification	A1	A1 / NA	NA (Supplied by ECU)
Induced Transients classification	SI2	SI2	SI2
ESD classification	SE2	SE2	SE2
Idle-consumption classification	NA	NA	NA
Water-penetration classification	IP6K9K	IP6K9K	IP6K9K

6.4.1 Wiring Requirements

If the component includes wiring (pigtails), it shall meet applicable wiring requirements per **CS.00050, PF.90303, PF.90012, SAE/USCAR-21** and **DS-158.**

6.4.2 Connector Requirements

Connectors and wire harness (including pigtails) shall be reviewed by S Release Engineer, EE QRE (Quality Reliability Engineer) and Wiring & Connector responsible engineers for any EE Interface issues with the adjoining sub-systems for compliance to S Preferred Practices.

Prior to engineering design freeze, EE or EM Components and Connectors located in the wet areas shall be evaluated for using sealed enclosures/ bezels (use of sealed components or connectors) or other effective water or liquid intrusion prevention techniques, such as, packaging orientation, use of canopy or barriers, tape or grease application, etc.

Refer to **CS.00050** section 5.15 (Wet Areas), for current wet area definitions and requirements. The following is a brief list of package environments considered wet areas:

For example:
- All vehicle exterior surfaces;
- Inside door or lift gate areas;
- Cabin or trunk floor areas under the carpet;

- Underhood, Chassis or Wheel Well locations; and
- Area determined by BICEEPR&U-QREs to be at risk for moisture exposure.

EM Components & Connectors in such locations shall be validated to withstand possible water or liquid intrusion requirements identified in Section 5 of this document.

The connector shall meet the requirements of **PF.90012** and **SAE/USCAR-25**. Approved connectors can be found in the Ridbul Catalog. If the connector is sourced by exS US, **CEP-042** must be used. Any deviation must be approved by EE Power & Signal Distribution Package/Design Department.

The connectors shall be rated to meet all applicable environmental requirements (temperature, fluid / solid intrusion, and vibration).

Irrespective of design lead all connectors must meet the ergonomic requirement of **SAE/USCAR-25,** when they are in their specific vehicle packaging location or the connector system must be changed to compliant connector systems.

Component, system (device) or vehicle validation tests shall use mating connectors and harnesses manufactured with wires of correct gauge size and crimping from production intent designs and processes. If the wire harness or connectors used for system or component test are not production intent, the test set-up must be pre-approved by S Engineering and Wiring Harness Group.

If the connector is pre-selected, it shall be E/E Component supplier's responsibility to obtain test reports from connector supplier to show compliance to connector specific Environmental, Electrical and Mechanical requirements from **PF.90012** or other equivalent connector standards. Component or Module supplier shall verify applicable mechanical and Electrical requirements from **PF.90012** including (but not limited to): Terminal to Terminal Engage/ Disengage Force, Terminal - Connector Insertion/ Extraction Force, Connector – Connector: Mating/ Un-mating Force, Audible Click, etc. along with Connector orientation to prevent water/liquid ingress, etc. During environmental validation (tests), the production intent approved connectors and wiring harness/ pigtails shall be used.

6.4.3 Electrical interface Requirements

Connectors and wire harness (including pigtails) shall be reviewed by S Release Engineer, EE QRE (Quality Reliability Engineer) and Wiring & Connector responsible engineers for any EE Interface issues with the adjoining sub-systems for compliance to S Preferred Practices using **SD-12219** "EE Interface Checklist".

6.4.4 Electrical System Compatibility Requirements

The Diesel Filter shall conform to the applicable Electrical System requirements specified in **CS.00244**. Verification test plans for these requirements shall be developed using Electrical and EMC test plan template. The test plans shall be approved by EMC Engineers. Component level DV and PV validations shall be performed at a S Recognized EMC Laboratory. Contact EMC Department for the detailed procedure.

6.4.5 Electromagnetic Compatibility (EMC) Requirements

The Diesel Filter shall conform to the applicable component level EMC requirements specified in **CS.00244**. Verification test plans for these requirements shall be developed using S Electrical and EMC test plan template. The test plans shall be approved by EMC Engineers. Component level DV and PV validations shall be performed at a S Recognized EMC Laboratory. Contact EMC Department for the detailed procedure.

6.4.6 Resistance to Electrolysis of Water-In-Fuel Probe

The diesel filter may contain electric probes to determine the presence of water or to indicate when the reservoir needs emptying. These probes may be subject to electrolysis with subsequent breakdown. This test shall insure the effects of electrolysis do not compromise the long term performance of the diesel filter.

6.4.6.1 Resistance to Electrolysis of Water-In-Fuel Probe Test Procedure

Required Test Items

1. 14 volts / 2 amp DC power source and connecting wires.
2. Container filled with tap water
3. Non-iodized salt

Preparation of Test Items

1. Salt water mixture for submerging probe blades is made by dissolving 1% salt by weight in normal tap water. The water may be warmed to shorten dissolving time.
2. All the probes to be tested shall be electrically connected to the power source in parallel.
3. The probe blades are submerged in the container of saltwater 13mm (1/2 inch) below the water surface. The body of the probe shall be kept above the water surface.

Test Procedure

1. Once all the test probe blades are positioned in the saltwater, adjust power supply to 14 volts.
2. WARNING: this test creates hydrogen and oxygen. Do not cover container or put the system in a confined area.
3. Add water whenever the water level approaches the end of the probe blades.
4. Run test for 168 hours.

Acceptance Criteria:

After performing the Water-in-Fuel Probe Resistance to Electrolysis, the probe shall successfully complete Water-in-Fuel Signal Level.

6.4.7 Dimensional Check of Fuel Fittings

The fuel fittings shall be design to be leak resistant and retain the connectors.

The fuel fittings shall comply with the dimensional requirements of **SAE J2044**.

6.4.8 Water-in-Fuel Signal Level

Water-in-Fuel sensor shall provide a signal at the appropriate water level.

Test Materials

1. Unit water collection bowl with probe.
2. Electronic signal circuit and appropriate power supply.
3. Tap water that has been demonstrated to operate the electronic circuit.
4. 100 ml Graduated cylinder- 5% accuracy.

Completion of Test

1. Hook up probe to electronic signal circuit and power supply.
2. Slowly fill level water collection bowl with tap water.
3. When electronic circuit operates (lights), stop adding water. Pour water from bowl into graduated cylinder and note ml volume. Repeat once and average.

Acceptance Criteria:

Water-in-Fuel Probe must provide a signal for the proper operation of the production electronic signal circuit when filter bowl water volume reaches (**See CTS**).

6.4.9 Heater Shut Off Test (Automated Heater)

Part 1: Test to determine if thermostat opens the electrical circuit in empty or full filter, before heater or unit housing is damaged.

Part 2: Test to determine if the heater fails without external damage if the thermostat fails as a closed electrical circuit.

Test Equipment Required:

1. Electrical power supply: 14 volts at 12 amps minimum.
2. Stopwatch
3. Refrigeration to -18 [°C] – 0.4 [°F].
4. Diesel fuel MS-10756.

Test Setup:

1. Secure the test unit head vertically to a suitable mounting in room temperature environment.
2. Preset power supply to 14 volts.
3. Immerse the element in diesel fuel (**MS-10756**) until wet. Shake dry and wipe off exterior. Thread element onto head.
4. Place bowl with heater into -18 [°C] – 0.4 [°F] refrigerator for 30 minutes.
5. Remove bowl and heater from refrigerator and immediately thread onto element.
6. Attach power to heater with power supply off.

Completion of Tests:

1. Turn on power supply and start time zero. Recheck and adjust voltage if necessary.
2. Note amount of current draw.
3. Note any external damage during test. Terminate test when current draw is zero.
4. Allow unit to cool. Pressure test to specification. Open test unit and note internal damage.
5. Part Two: Repeat test with thermostat bypassed so current draw continues until heat dissipation equilibrium is reached for 30 minutes, or heater burns out.
6. Report voltage and current draw vs. test time. Report any damage to bowl, element or heater.
7. Repeat steps 1-6 with element fuel filled.

Acceptance Criteria:

1. Part One: Heater turns off before 10.0 minutes time has elapsed when filter is full of fuel, or before 3.0 minutes when filter is empty.

2. Part Two: Heater fails (when thermostat has failed in closed position) without any signs of external damage to heater and feed through or internal damage to filter element or bowl. Heater must fail "safe" either when element is full of fuel or empty.

6.4.10 Functionality of the Electric Heater

Vehicle/heater interconnection circuit scheme will be provided in CTS, based on specific component and application.

Example of vehicle/heater interconnection scheme for engine controlled heater.

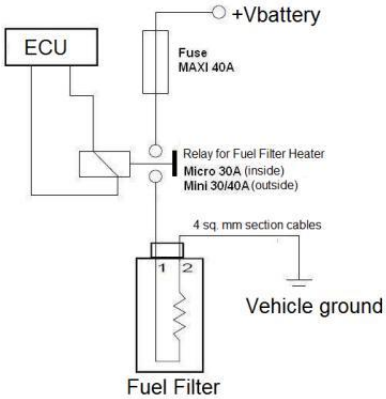

Figure 1 - Functionality of the Electric Heater

6.4.10.1 Heater General Performance requirement

Independently from specific component and application, heater shall be designed in order to meet minimum efficiency criteria.

Efficiency is defined as the ratio between electrical energy absorbed from battery/power supply and the amount of heat exchanged with the fluid.

Heater efficiency is defined as following.

$$\eta = \frac{Q}{E} = \frac{\Phi / 3600s \cdot d \cdot C_p \cdot \Delta T}{V_{bat} \cdot I_{abs} \cdot 1s}$$

Where:
Q is the heat exchanged with fuel.
E is the electrical energy absorbed from electrical power source.
Φ is the flow rate (measured in l/h).
d is fluid density.
Cp is fluid specific heat.
ΔT is the temperature difference from fluid before the heater and after the heater.
$\mathbf{V_{bat}}$ is the power supply voltage.
$\mathbf{I_{abs}}$ is the current absorbed from power supply.

Heaters shall be tested according to the procedure described below.
Heaters shall have a minimum efficiency **η = 0.75** after 6 minutes from test beginning.

Test fluid: Distilled water
Test fluid T: 14,5 [°C] – 58 [°F]
Cp: 4180 J/KgK
d: 1 Kg/l
Φ: 130 l/h
V_{bat}: 12.5V
Test duration: 7 minutes

Test shall be carried using, when possible, 0.5 meters of original wiring harness as present in the vehicle. Where not possible, use copper wires with cross-section area at least 2.5 squared millimetres.
Data shall be collected through a data logger, with frequency at least 5Hz.

Test report shall be presented to customer showing graphs and calculation, demonstrating compliancy with efficiency requirement.

6.4.10.2 Heater Specific Performances requirements (application-based)

The CTS will contain specific, application-based further requirements on heater operation logic and performances.

CTS will define the parameters for application-based testing procedure, and related requirements.

Here below an **example** CTS application-based requirement.

Test parameters:

Test fluid: Arctic Diesel Class 3 (acc. To EN590)
Test fluid T: -26 [°C] - -14.8 [°F]
Φ: 130 l/h
V_{bat}: 12.5V
Test duration: 7 minutes

Requirements:
Max peak current: 40A
Max peak duration: 2.5s (time in which current is higher than maximum working current)
Max working current: 30A
ΔT minimum: 3 [°C] – 37.4 [°F] (Delta T measured after 6 minutes)

ΔT minimum is correlated to minimum working current (therefore to minimum power consumption) by the formula below, considering diesel fuel general values for specific heat (Cp) and density (d), and the minimum efficiency defined in previous chapter.

$$\Delta T_{\min} = \frac{\eta_{\min} \cdot V_{bat} \cdot 1s \cdot I_{\min}}{\Phi / 3600s \cdot d \cdot C_p}$$

Test shall be carried using, when possible, 0.5 meters of original wiring harness as present in the vehicle. Where not possible, use copper wires with cross-section area at least 2.5 squared millimetres.

Data shall be collected through a data logger, with frequency at least 5Hz.

6.4.11 Other requirements

Any other application-based requirements (e.g. other e/e particular components) will be defined within CTS.

6.4.12 EMC/RFI/EMI performance requirements

According to **CS.00244.**

The device classification and related validation plan have to be agreed with S EE/E department.

6.4.13 Mechanical and environmental performance requirements

According to **CS.00056** or **01552_16_03847** according to the region

The device classification and related validation plan have to be agreed with S Italy EE/E department.

7 FUNCTIONAL REQUIREMENTS

Specific CTS could indicate different procedures or target parameters.

7.1 Filtering Efficiency

Purpose:

This International Standard specifies a multi pass-type filtering test with continuous injection of contaminating agent and using the wave particle counter method, in order to assess the performance of a diesel fuel for internal combustion engines submitted to a continuous flow of test liquid. The test procedure determines the contaminant capacity of a filter and its particulate removal characteristics. This International Standard applies to the filtering elements having a flow rate ranging from 50 l/h to 800 l/h.

Parameters:

Contaminating agent: must meet Standard **ISO 12103**-A3 medium grade.
Test fluid: must meet MIL-H-5606 or AIR 3520.
Flow rate: according to CTS.

Procedure:

A. Carry out the measurement according to Standard **ISO 19438**.
B. End of test at pressure drop of 250 [kPa] - 36.3 [psi].

Acceptance criteria:

Table 5 - Acceptance criteria - Filtering efficiency	
Particle dimension [µm(c)]	**Initial and average efficiency according to ISO 19438 [%]**
> 4	90
> 5	95
> 10	99
> 15	99
> 20	99.9
> 30	99.9

7.2 Filter Efficiency - Single Pass Particle Retention

The HFFWS shall provide filtration protection to downstream components.

Test Procedure

Test per **ISO 19438** Diesel fuel and petrol filters for internal combustion engines — Filtration efficiency using particle counting and contaminant retention capacity.

Acceptance Criteria:
Single pass particle retention shall be no less than 95% at 5 microns.

7.3 DHC (Dust Holding Capacity)

Purpose:

This test determines the contaminant mass capability in the filter in order to define the maintenance operation frequency.

Parameters:

Test fluid: Diesel fuel (**EN590** or **MS-10756**)
Contaminating agent: Carbon black + Aluminum oxide dust (M1 / M2 of **ISO 12103**-2)
Flow rate: according to CTS.
Pressure drop at test end: according to CTS.

Design data:
K service interval (km)
CC fuel consumption (l/ 100km) according to CTS (component technical specification)
FM factor 1 for good fuel market, 0.34 for bad fuel market
AS specific accumulation (4.8 mg/l - worst case good fuel from survey data)
DHC filter accumulation (mg)

The ratio is as follows:

$$\mathrm{DHC} = \mathrm{AS} \cdot \frac{(\mathrm{K} \cdot \mathrm{CC})}{100 \cdot \mathrm{FM}}$$

The accumulation capacity depends on the quality of the fuels present on the various markets in the world, on the vehicle consumption and on the filter service frequency.
As concerns the fuel quality, see World Wide Fuel Survey.

Procedure:

A. Carry out the measurement according to Standard **ISO 4020**.
B. At the test end, draw a pressure drop diagram in function of the polluting agent inlet during the test.

Acceptance criteria:

The test result is positive if the injected grams are higher than the DHC value with a pressure drop equal to the limit and parameters indicated on CTS.

At the end of test submit the filter to a Functionality of Filter Assembly at Cold Condition as per Section 7.13.

7.4 Outwards Sealing <D>

Purpose:

This test to check the tightness of component towards the external environment.

7.4.1 Sealing Test with Air

Procedure:

A. Close the filter outlet couplings and connect the inlet coupling with air feed / flow rate micrometer at maximum working pressure (see Section 1.2).
B. Wait 30 s to stabilize and check the leak value.
C. Perform the test at - 40 [°C] - -40 [°F], 23 [°C] - 73.4 [°F] and 80 [°C] - 176 [°F]

Acceptance criteria:

Leak value shall be lower than 3 cm^3/min.

7.4.2 Sealing Test with Fuel

Procedure:

A. Close the filter outlet couplings and connect the inlet coupling with fuel fed at 10.3 bar (150 psi).
Fuel is Diesel per **EN590** Artic fuel class 4, or equivalent.
B. Wait 30 s to stabilize and visually check for leaks.
C. Perform the test at - 40 [°C] - -40 [°F], 23 [°C] - 73.4 [°F] and 80 [°C] - 176 [°F]

Acceptance criteria:

No leaks are allowed.

7.5 Seal of Filtering Element Gasket on Dirt / Clean Sides

Purpose:

This test to check the tightness of the internal sealing.

Parameters:

Perform tests on non-functional component (remove the filtering element and replace it with a special component to be agreed with customer).

Procedure:

A. Perform the test at - 25 ± 2 [°C] - -13 ± 35.6 [°F] in diesel **EN590** class 2 or higher after a stabilization oF8 h minimum.
B. Perform the test at + 23 ± 2 [°C] - 73.4 ± 35.6 [°F] in diesel **EN590** after a stabilization oF4 h minimum.
C. Perform the test at + 80 ± 2 [°C] - 176°F ± 35.6 [°F] with test fluid **ISO 4113** after a stabilization oF4 h minimum.
D. Repeat the test at – 25 [°C] - -13 [°F] and 23 [°C] - 73.4 [°F] after static ageing at 80 [°C] - 176 [°F] for 800 h in diesel fuel **EN590** + 30% of FAME.

Acceptance criteria:

Check that all the inside gaskets permit to get a maximum leak oF3 cm^3/min with a pressure between dirt/clean sides at least equal to 500 [kPa] - 72.5 [psi] in diesel fuel or equivalent test fluid.

7.6 Inner Seal Between Dirt Side/Clean Side (Bubble-Test)

Purpose:

This test to check the integrity of the filtering element and the correct sealing between filtering element and housing.

Procedure:

A. Carry out the measurement according to Standard **ISO 4020**. (For method use **ISO 2942**)
B. Feed the filter from the inlet with compressed air at the pressure of 1.3 ± 0.1 [kPa] - 0.2 ± 0.015 [psi].
C. Measure the air leak from the outlet and check it.

Acceptance criteria:

Air leak from the outlet: lower than 100 cm^3/min.

7.7 Pressure drop on new product

Parameters:

Test liquid: Diesel fuel (Standard **FPW.55520/01**)
Max Δp: 30 [kPa] - 4.3 [psi] at 200 l/h
Report diagram p = F(Q [l/h]) in the flow rate range from 10 l/h to 220 l/h

Procedure:

A. Perform test according to Standard **ISO 4020**.

Acceptance criteria:

According to CTS.

7.8 Filter Cleanliness

Purpose:

Check the filter clean down cleanliness.

Parameters:

Test fluid: **ISO 4113** / Shell S5585

Procedure:

A. Perform the test according to the Figure 2, let at least 1000 cm^3 of fluid flow through the filter.

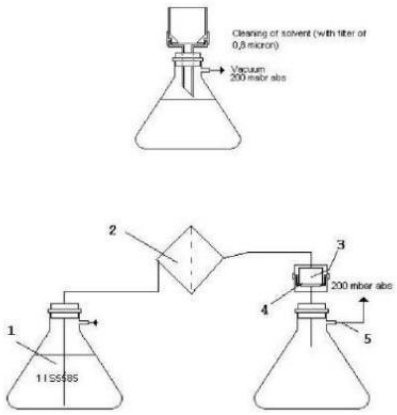

Figure 2 - Inner Cleaning of Filter

Key to annotations:
1. Test fluid: **ISO 4113** / Shell S5585
2. Filter to be tested.
3. Millipore membrane container.
4. Millipore membrane (8 micron).
5. Suction system.

B. Check the particle distribution by optical method.

Acceptance criteria:

Total weight of contamination must be below 0.5mg/part.

Table 6 - Acceptance criteria - Filter cleanliness

Particle class	Particle quantity
> 50 – 100 µm	< 90
> 100 – 200 µm	< 25
> 200 – 500µm	0
NOTE: Non-metal fibers / filaments are to be considered as solid particles.	

7.9 Filter Element Collapse Test

Purpose:

This test to check the filter element collapse pressure only.

Procedure:

Perform the test according to Standard **ISO 4020**.

Acceptance criteria:

Check the value is > 800 [kPa] - 116 [psi].

7.10 Burst Test

Purpose:

This test to check the complete filter resistance.

Procedure:

Perform the test according to Standard **ISO 4020**.

Acceptance criteria:

Filter burst resistance up to 20 bar.

7.11 Fuel Fitting Torque Test

Purpose:

Fuel fittings shall not break with normal handling, assembly or on vehicle usage.

Parameters:

Temperature: 23 ± 2 [°C] - 73.4°F ± 35.6 [°F]

7.11.1 Metal Fitting Press Fit to Housing

Procedure:

Test equipment required a torque wrench with 25 Nm max torque, suitable fixture such that the test torque can be applied at the center of the fitting, and a suitable mounting so that torque can be applied to the fitting without head rotation.

Acceptance criteria:

Fuel inlet and outlet fittings shall be capable of withstanding a minimum of 7.3 Nm torque without breaking free of their bond to the filter head (e.g. aluminum casting).

7.11.2 Plastic Molded Fittings

Plastic molded quick connect fitting shall meet the side load requirements of **SAE J2044** 6.4 Side load Capability.

7.12 Water Separation Efficiency

Purpose:

This test assesses the filter capacity in separating not dissolved water, dispersed both finely and roughly by diesel oil. This test is specific for filters installed upstream or downstream to low pressure pump and flow rate range from 50 l/h to 900 l/h.

Parameters:

Test flow rate: 200 l/h
Carry out the test with both 1500 ppm and 2% of water (as ISO 16332 / 6.4).
Use Diesel according to **EN590** with 30% of FAME according to **EN14214**.

Procedure:

Carry out the test according to Standard **ISO 16332**. This Standard provides the specifications for the water - fuel separation test. Water is injected continuously with a method able to measure its concentration in fuel.

Acceptance criteria:

Check that efficiency is higher than 95%.

7.13 Functionality of Filter Assembly at Cold Condition

Purpose:

Check the performances of the filter during severe fuel conditions.

Parameter:

Supply voltage: 12.5 V and 8 V.
Test fluid: commercial diesel according to **EN590** - grade D (minimum FAME content 5%).

Procedure:

A. Set the circuit as shown in Figure 3.

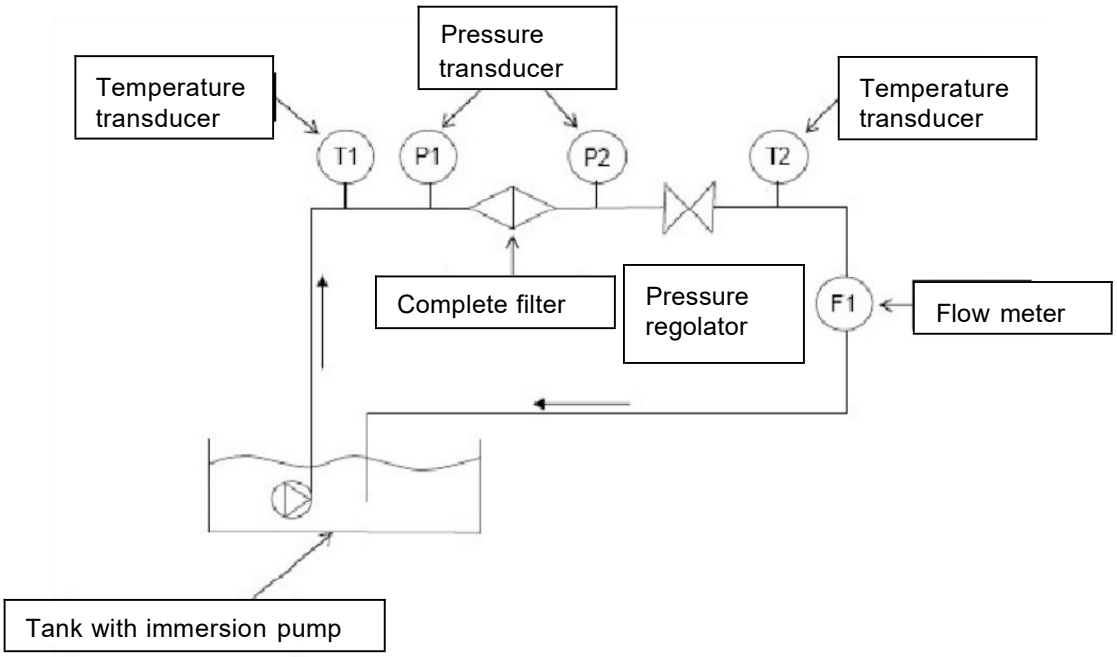

Figure 3 - Functionality of Filter Assembly at Cold Condition

B. Pipes from pump to filter and from filter to tank must have length equal to 3 m with inner diameter of 6 mm.
C. Connect the return pipe from the filter to the flange on the pump assembly.
D. The pump in the tank must have functional characteristics equivalent to the component of which use is made in the mass production of the vehicle (to be shared with the S component manager).
E. Make use of a pressure regulator generating a counter-pressure of 350 [kPa] - 50.8 [psi] on pressure sensor P2.
F. Fill the tank with at least 20 l of commercial diesel according to **EN590** - grade D (minimum FAME content 5%). Verify that the fuel level shall be lower than the reservoir of the pump.
G. Check the Pressure Drop at environmental temperature.
H. Stabilize the system for 10 h at T = CFPP – 2 [°C] - 28.4 [°F].
I. Power the pump with 12.5 V voltage (power Heater if present on filter).
J. Monitor the trends of pressures and temperatures for 10 min and record the flow rate.
K. Check that, during the test, the pressure drop on the filter is ≤ 400 [kPa] - 58 [psi].
L. Repeat the Pressure Drop check at environmental temperature and check that the measured value is ≥ than the initial one.
M. Repeat steps from H to L with pump power supply = 8V.

Acceptance criteria:

Check that, during the test, the pressure drop on the filter is ≤ 400 [kPa] - 58 [psi] at minimum flow rate (according to CTS).

Repeat the Pressure Drop check at environmental temperature and check that the measured value is ≥ than the initial one.

7.14 Resistance of Filter Assembly at Cold Condition with Presence of Paraffin

Purpose:

To check filter element integrity of filter clogged by paraffin.

Procedure:

Repeat the test of the paragraphs above with temperature T = CFPP – 12 [°C] - 10.4 [°F].

Acceptance criteria:

Repeat the Pressure Drop and flow rate check at environmental temperature and check that the measured value is ≥ than the initial one.

7.15 Tightening Torque of new Threaded Elements

Measure the tightening torque value of the components and check that ranges are within the limits indicated in the drawing.

7.16 Electrostatic Charge Resistance Test

Component shall meet electrostatic charge mitigation criteria reported in **SAE J1645** (rev. August 2006), referring to chapter 4.2 for charge accumulation and transfer limits, and chapter 5 for detailed testing procedures.

Specific testing procedures and related acceptance criteria shall be agreed between customer and supplier, case by case.

7.17 Emulsified Water Separation Test

Purpose:

The diesel filter shall be capable of separating fine droplets of water (emulsified) due to the in tank fuel pump. (Consumption and flow rate specified in CTS).

Procedure:

1. Fill tank A with 10 gallons of diesel fuel with an IFT oF15 (see **ASTM D971**).
2. Adjust 3 way valve to flow to diesel filter, open Metering Valves A and C.
3. Energize in tank fuel pump, adjust metering valves A and C to achieve fuel flow rate to tank B at maximum engine consumption (see CTS). Verify flow meter A plus flow meter B is at or greater than maximum specified fuel flow. (see CTS)
4. When flow rate has been set, adjust three-way valve B so fuel will flow from the fuel pump back into tank A. Return fuel from tank B to tank A.
4. Add water to tank A (run separate tests at 0.25% and 2%), energize auxiliary pump and wait 5 minutes to emulsify mixture.
5. Readjust valve B so fuel flows from to the Diesel Filter to begin the test. (it may be necessary to open the water drain valve slightly to remove excess water especially when testing with a 2% water content).
6. Using a Carl Fisher tester, measure the diesel fuel that is draining into tank B every 5 minutes or

continuously PPM check with Liebherr sensor.
7. When tank A is empty, the test is complete.

Acceptance Criteria:

Overall water separation efficiency > 1500 PPM.

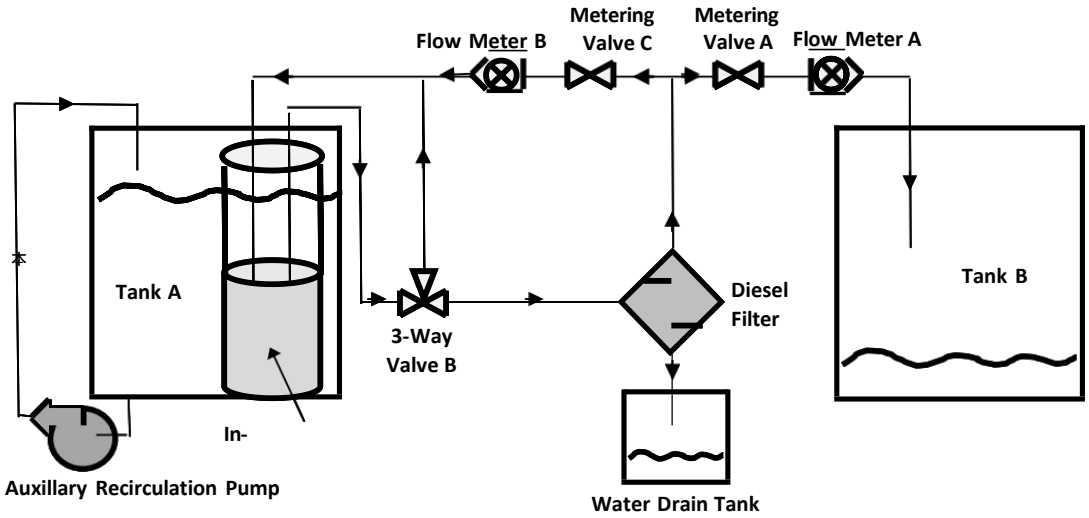

Figure 4 - Emulsified Water Separation Test

7.18 Thermostatically Controlled Heater On/Off Test (Automated heater)

Purpose:

Ensure Heater Control Circuit is stable with gradual fuel temperature changes.

Procedure:

1. Fill fuel tank with 4 gallons winterized diesel fuel.
2. Adjust test chamber to attain fuel temperature 10 degrees F below the set point of thermostat.
3. When fuel temperature stabilizes, turn on fuel pump to circulate fuel through the fuel filter and energize the filter heater with 12.5 volts. Note: the chamber can be turned off and the door can be opened to speed up the warming of the fuel at this point.
4. Monitor inlet temperature (T1) and outlet temperature (T2) of fuel filter and fuel filter heater power consumption using an oscilloscope or similar recording instrument.
5. Continue circulating the chilled fuel as it approaches the off point of the thermostat, note exactly at what temperature the thermostat turns off.
6. Repeat Steps 2 to 5 ten times.

Acceptance Criteria:

The off signal must be sharp (no dithering) at a repeatable temperature.

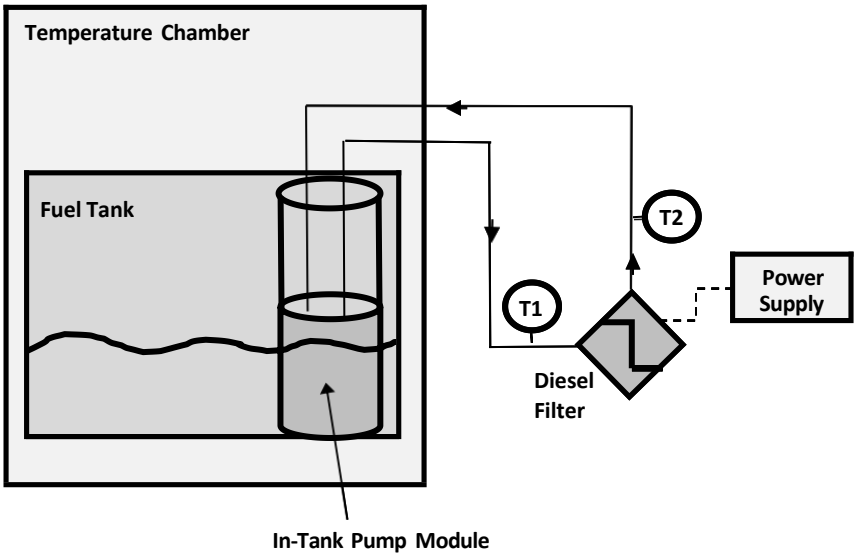

Figure 5 - Thermostatically Controlled Heater On/Off Test (Automated heater)

7.19 Functionality of NTC Temperature Sensor

NTC temperature sensor is described by the following parameters, each explained below.

- Characteristic curve of NTC
- ECU-NTC interconnection circuit scheme
- Supply voltage range
- Operating Temperature

Characteristic curve of NTC [R=f(T)] will be defined in the Product Card, according to specific application.

Example of NTC characteristic curve is reported below.

Table 7 - Characteristic values of NTC sensor

Temp. [°C] - [F°]	Absolute value without measuring error			Temp toll [°C] - [°F]	Values with 1°C	
	Nom Resistance	Min Resistance	Max Resistance		Min	Max
-40 - -40	45.313	40.490	50.136	1.9 - 35.4	38.313	52.926
-30 - -22	26.114	23.580	28.647	1.8 - 35.2	22.307	30.194
-20 - -4	15.462	14.096	16.827	1.7 - 35	13.402	17.718
-10 - 14	9.397	8.642	10.152	1.7 - 35	8.244	10.661
0 - 32	5.896	5.466	6.326	1.6 - 34.9	5.227	6.623
10 - 50	3.792	3.542	4.043	1.5 - 34.7	3.390	4.217
20 - 68	2.500	2.351	2.649	1.5 - 34.7	2.262	2.760
25 - 77	2.057	1.941	2.173	1.4 - 34.5	1.870	2.260
30 - 86	1.707	1.615	1.798	1.4 - 34.5	1.553	1.868
40 - 104	1.175	1.118	1.231	1.3 - 34.3	1.080	1.277
50 - 122	0.834	0.798	0.870	1.3 - 34.3	0.771	0.900
60 - 140	0.596	0.573	0.618	1.2 - 34.1	0.555	0.639

Table 7 - Characteristic values of NTC sensor

Temp. [°C] - [F°]	Absolute value without measuring error			Temp toll [°C] - [°F]	Values with 1°C	
	Nom Resistance	Min Resistance	Max Resistance		Min	Max
70 - 158	0.435	0.421	0.451	1.1 - 34	0.408	0.465
80 - 176	0.323	0.313	0.332	1.0 - 33.8	0.301	0.342
90 - 194	0.243	0.237	0.250	0.9 - 33.6	0.230	0.257
100 - 212	0.186	0.182	0.191	0.8 - 33.4	0.178	0.196
110 - 230	0.144	0.140	0.148	1.0 - 33.8	0.135	0.152
120 - 248	0.113	0.109	0.116	1.2 - 34.1	0.106	0.119
130 - 266	0.089	0.086	0.093	1.4 - 34.5	0.084	0.095
140 - 284	0.071	0.068	0.074	1.6 - 34.9	0.067	0.076

ECU-NTC interconnection circuit scheme will be reported in Product Card, according to specific component and ECU.

Example of ECU-NTC interconnection circuit is reported below.

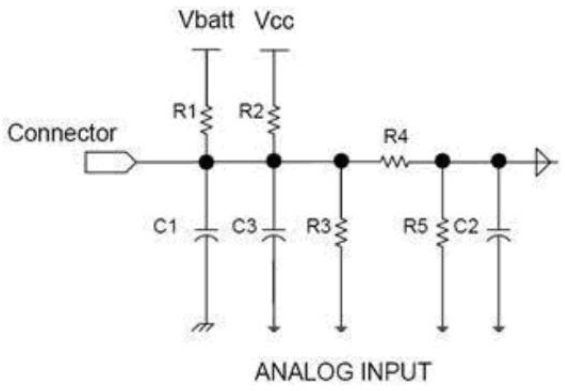

Figure 6 - ECU-NTC Interconnections Circuit Scheme

Table 8 - Pull-up/pull-down resistors values

Analog input

	SIGNAL	CONN	PIN	INPUT NETWORK									Basic Tolerance of pull-up/down
				R1	R2	R3	R4	R5	C1	C2	C3	TAU	
				PU/Vb	PU/Vcc	PD	RS	PD	CRF	Csignal	Csignal	TAU	
				(KΩ)	(KΩ)	(KΩ)	(KΩ)	(KΩ)	(nf)	(nf)	(nf)	(ms)	
4	Fuel Temp_IA	B	80		2		27		1	100		2.70	±1%

Supply voltage range for NTC temperature sensor will be defined in Product Card, according to specific application.

Example of Supply voltage range definition for NTC sensor is reported below.

NTC is power supplied by ECU with power supply voltage = 5 V +/- 2%.

NTC Working temperature range will be defined in Product Card, according to specific application and installation.

Example of Supply voltage range definition for NTC sensor is reported below.

NTC sensor operating temperature range: -40 ÷ 125 [°C] - -40 ÷ 257 [°F]

7.20 Fuel Temperature Measurement Accuracy Test (With NTC Sensor)

Purpose:

Evaluate NTC accuracy and delay in reading fuel temperature at various temperatures.

Parameters:

Test fluid: various test fluid (see description)
Ambient temperature: 23 ± 5 [°C] - 73.4 ± 41 [°F]
Test fluid temperature:

- 23 ± 5 [°C] - 73.4 ± 41 [°F]
- - 25 ± 5 [°C] - 13 ± 41 [°F]
- 80 ± 5 [°C] - 176 ± 41 [°F]

Procedure:

A. Fill a tank with about 20 l of test fluid and put it into climatic chamber at 23 ± 5 [°C] - 73.4 ± 41 [°F] and stabilize system for 4h.
B. Put the filter at ambient temperature 23 ± 5 [°C] - 73.4 ± 41 [°F] outside climatic chamber.
C. Put two temperature sensor upstream and downstream fuel filter.

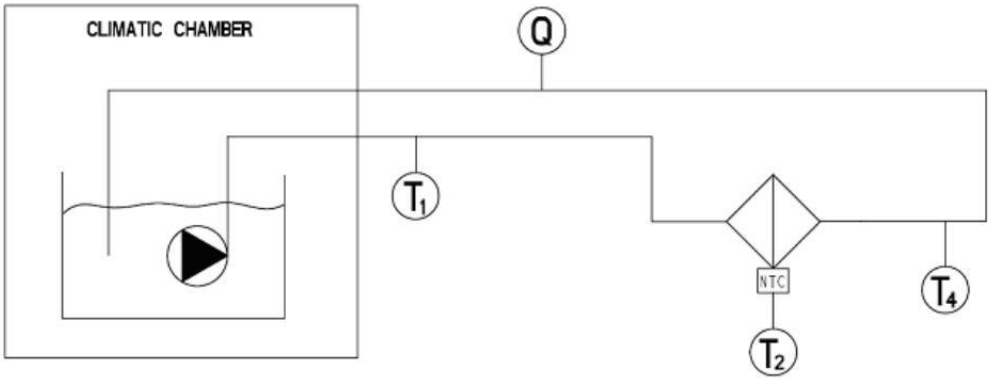

Figure 7 - Fuel Temperature Measurement Accuracy

D. Feed the pump so that the fuel circulates in the system for about 3 minutes at a flow rate oF200 l/h.
E. The following parameters shall be continuously recorded (5Hz minimum sampling rate):
   1. Fuel temperature at inlet of the filter T1.
   2. Fuel temperature at the outlet of the filter T2.
   3. Resistance value of the NTC T4.
F. Repeat the test with test fluid temperature at -25 ± 5 [°C] - -13°F ± 41 [°F] and 80 ± 5 [°C] - 176 ± 41[°F] (for this test it is allowed to use oil instead of diesel, with the same characteristics in terms of viscosity and density).
G. Calculate temperature acquired by NTC through R-T curve provided by supplier.
H. Compare NTC temperature with inlet and outlet temperature.
I. Heater, if not automatic, shall be switched ON during the test at -25 [°C] - -13 [°F].

Acceptance criteria:

When fuel temperature is 80 ± 5 [°C] - 176 ± 41 [°F], the difference between temperature measured by T4 and T2 shall be T4-T2 < 15 [°C] - 59 [°F] after 300 s from test beginning.

Data related to other tests with fuel at 23 ± 5 [°C] - (73.4 ± 41 [°F] and fuel at -25 ± 5 [°C] - -13 ± 41 [°F] shall be recorded only for reference.

7.21 Functionality of Water in Fuel Sensor

Water in Fuel (WiF) sensor is described by the following parameters.

- WiF sensor Type (Active/Passive)
- ECU-WiF interconnection circuit scheme
- Voltage thresholds
- Maximum current absorption
- Self-Test time
- Supply voltage range
- Operating Temperature

Each of these parameters will be defined in Product Card, based on specific application.

Example of WiF description is reported below.

WIF sensor type (active or passive): active

ECU-WIF interconnection circuit scheme

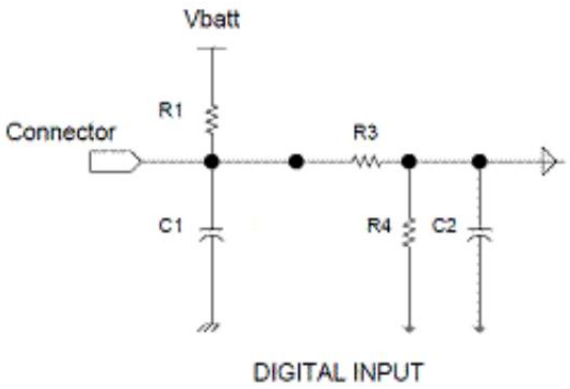

Figure 8 - ECU-WiF Interconnection Circuit Scheme

Table 9 - Pull-up/pull-down resistors values and tolerances

				DIGITAL INPUTS								
				INPUT NETWORK								
				R1	R5	R2	R3	R4	C1	C2	TAU	NOTE
	SIGNAL	CONN	PIN	PU/Vb	PU/Vcc	PD	RS	PD	CRF	Csignal		
				(KΩ)	(KΩ)	(KΩ)	(KΩ)	(KΩ)	(nf)	(nf)	(ms)	
11	Water in Fuel Temp_ID	B	26	3.3	N/A	N/A	47	100	1	47	2.2	± 5% tolerance

Voltage Thresholds

Voltage thresholds for normal and alarm conditions:
In normal condition V out > 5.5 V.
In alarm condition V out < 2.2 V.

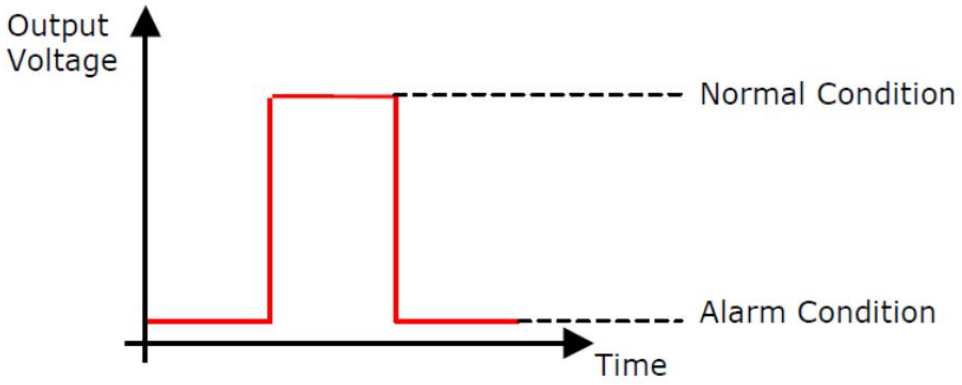

Figure 9 - Functionality of Water in Fuel Sensor

Maximum Current Absorption
Absorbed current shall be < 50 mA in every condition.

Self-Test Time
Self-test time value and tolerances:
In temperature range -30 ÷ 110 [°C] - -22 ÷ 230 [°F] self- test time shall be 3 s ± 20% (2.4 s ÷ 3.6 s)
In temperature range -40 ÷ 125 [°C] - -40 ÷ 257 [°F] self-test time shall be in the range 1.7 s ÷ 4.5 s.

Supply Voltage Range
Supply Voltage is in the range 10V ÷ 16V (according to A1 power supply classification).

Operating Temperature
Operating temperature range is -40 ÷ 125 [°C] - -40 ÷ 257 [°F].

8 SAFETY AND REGULATORY REQUIREMENTS<S>

Supplier shall ensure compliance to all applicable regulatory requirements for the Diesel Filter in the markets where the vehicles are sold.

Products, processes and operations listed in this Standard must conform to the local laboratory, test track and proving ground safety practices.

9 RELIABILITY / DURABILITY REQUIREMENTS<S>

Reliability/durability test procedures are required to demonstrate at engineering level (with a given probability and level of confidence) that a system or component will perform its intended functions over the expected useful life, under all anticipated operating conditions and environments as specified in preceding sections. The tests must ensure that expected design and process variations are covered, resulting in adequate product robustness. Test to Failure (TTF) is the preferred test methodology. The attached Recommended Test Flow for EE Module Validation (see Annex B) for Section 5 ENVIRONMENTAL REQUIREMENTS and Sections 6.4 - 6.4.13 shall be considered as part of DUT reliability/durability requirement verification.

9.1 System and Vehicle Level Requirement

S Engineering shall perform system and vehicle level tests on program phase vehicles (such as, System bench tests, Plywood Buck, Hardware in Loop, Corrosion, PG Driving, BSR, Hot/Cold Trips, etc.) during program development. Examples of S Proving Grounds include HMSR, SXV, PT-7, L4S, etc. or reliability validation on 336 vehicle fleets to verify system interface and customer usage applications during different stages of program development (Examples: FDV, VP, PS and Job 1).

Any degradation to functional and/ or performance requirement involving component reliability/ durability issues shall be promptly addressed by component Supplier. Corrective actions shall focus on issue prevention and may involve changes to design including any component validation testing.

9.2 Design Failure Modes and Effects Analysis (DFMEA)

The DFMEA must address and correlate to all of the functions which are specified in this Performance Standard. All potential Failure Modes, as described, must be evaluated and taken into account in the DFMEA risk analysis. FMEA analysis shall be included in timing plan shared and agreed with supplier at

project start. A complete DFMEA is normally property of suppliers and available for examination at their site. Supplier will be responsible for DFMEA execution and content accuracy; S component or system specialist shall analyze and approve supplier's analysis.

9.3 Resistance to Thermal Cycles

Purpose:

To check filter integrity under thermal cycles.

Parameters:

Temperature T max = 120 ± 2[°C] - 248 ± 35.6 [°F] for under hood applications
90 ± 2 [°C] - 194 ± 35.6 [°F] for under chassis applications
Temperature T min = - 40 ± 2 [°C] - - 40 ± 35.6 [°F]

Procedure:

A. Carry out 20 thermal cycles on the filter as follows:
   1. 2 h at Tmax
   2. 2 h at Tmin

With temperature increase / decrease steps of 2°C/min - 35.6°F/min.

Acceptance criteria:

At the end of the test check:
- Filter integrity (visual inspection),
  - Outwards sealing <D>, (See Section 7.4)
  - Pressure drop, (See Section 7.7)
  - Functionality of the electric heater, (See Section 6.4.10)
  - Functionality of the NTC temperature sensor, (See Section 7.19)
  - Functionality of the water in fuel sensor, (See Section 7.21)
  - Filter efficiency to test sealing ability and/or cold start, (See Section 7.13)
  - Residual tightening torque of threaded elements on filter, (See Section 7.15)
- Carry out 50 opening/closing operations of water drain screw and repeat the check of outer seal checking its conformity and
  - Fuel fitting torque test, (See Section 7.11).

9.4 Resistance to Pulsating Pressure

Purpose:

Check the function of filter subject to the start/stop conditions.

Parameters:

Test fluid: Diesel Fuel
Test fluid temperature: 80 ± 2 [°C] - 176 ± 35.6 [°F]
Test cycle:
- 1 s with P = 0 [kPa] 0 [psi]
- 1 s with P = 700 [kPa] - 101.5 [psi]

Immediate switching (square wave)

Procedure:

A. Perform 600,000 cycles according to Standard **ISO 4020**:2001,

Acceptance criteria:

At the end of the test, check:
- Filter integrity (visual inspection),
  - Outwards sealing <D>, (See Section 7.4)
  - Functionality of the electric heater, (See Section 6.4.10)
  - Functionality of the NTC temperature sensor, (See Section 7.19)
  - Functionality of the water in fuel sensor, (See Section 7.21)
  - Residual tightening torque of threaded elements on filter, (See Section 7.15)
- Carry out 50 opening/closing operations of water drain screw and repeat the check of outer seal, checking its conformity and
  - Fuel fitting torque test. (See Section 7. 11).

9.5 Resistance to Vibrations

Purpose Procedure 1:

Verify filter internal component mechanical durability using the filter efficiency test (filter capability test) (filter must be empty to avoid the test liquid contamination).

Purpose Procedure 2:

Check the Housing's and Support's mechanical resistance.

The vibration stresses to which the filter is exposed in its life cycle depend to the location mounting:
- Application on chassis: refer to Spec. **CS.00056**, Vibration Class V2
- Application on engine: refer to Spec. **CS.00056**, Vibration Class V1

Procedure 1 - Empty filter:

A. Fasten the filter to the vibrating cup with bracket representing the mass product.

Procedure 2 - Filter filled with test fluid ISO 4113:

A. Fasten the filter to the vibrating cup with bracket representing the mass product.

Acceptance criteria:

Procedure 1:
At the end of the test check:
- Filter integrity (visual inspection),
  - Outwards sealing <D>, (See Section 7.4)
  - Pressure drop, (See Section 7.7)
  - Functionality of the electric heater, (See Section 6.4.10)
  - Functionality of the NTC temperature sensor; (See Section 7.19)
  - Functionality of the water in fuel sensor, (See Section 7.21)
  - Filter efficiency to test sealing ability and/or cold start, (See Section 7.13)
  - Residual tightening torque of threaded elements on filter, (See Section 7.15)

- Fuel fitting torque test, (See Section 7.11).

Procedure 2:
At the end of the test check:
- Filter integrity (visual inspection),
  - Outwards sealing <D>, (See Section 7.4)
  - Residual tightening torque of threaded elements on filter, (See Section 7.15)
- Check the continuous signal of water in fuel sensor during the test on the vertical axis direction,
  - Fuel fitting torque test, (See Section 7.11).

9.6 Resistance to Fuels (Dynamic Ageing)

Purpose:

Check mechanical and functional behavior with critical fuels.

Parameters:

As explained in the procedure below.

Procedure:

A. Submit the filter to 800 h of working (flow rate acc to CTS), in environment at 100 ± 2 [°C] - 212 ± 35.6 [°F] with liquid at the temperature of 80 ± 2 [°C] - 176 ± 35.6 [°F]. Replace the test liquid every 200 h.
B. Carry out a test for each following liquid:
   1. DIESEL OIL according to **EN590** with 30% of FAME according to **EN14214**.
   2. For North America perform test with Ultra low sulfur diesel (**MS-10756**) with biodiesel 20% SME (**MS-11182**).

Acceptance criteria:

At the end of the test check:
- Filter integrity (visual inspection),
  - Outwards sealing <D>, (See Section 7.4)
  - Pressure drop, (See Section 7.7)
  - Functionality of the electric heater, (See Section 6.4.10)
  - Functionality of the NTC temperature sensor, (See Section 7.19)
  - Functionality of the water in fuel sensor, (See Section 7.21)
  - Residual tightening torque of threaded elements on filter, (See Section 7.15)
- Cold start to test sealing ability,
- Carry out 50 opening/closing operations of water drain screw and repeat the check of outer seal checking its conformity,
  - After the test in DIESEL according to **EN590** carry out the water separation test.
  - Fuel fitting torque test, (See Section 7.11).

9.7 Heater Life Cycle Test (Automated heaters)

Test to determine if heater and thermostat withstands accelerated environmental conditions that may be encountered under vehicle operating conditions over time. The cold shock cycle is repeated 7500 times (simulating approximately 10 year or 150,000 miles life expectancy).

Test Equipment

1. Environmental Chamber capable of maintaining -23 [°C] - -10 [°F].
2. Reservoir capable of holding at least 20 liters (5 gallons) of diesel fuel (MS-10756).
3. Power supply capable oF24 vdc. 40 amps peak.
4. Gear pump system loop: from reservoir, to manifold, to units, back to reservoir.
5. Delay off timing device with 10 amp contacts to control pump on/off.
6. 12 volt current detection circuit to trigger timing device when all thermostats open. The following is a description:

- A suitable core (e. g. an M6x80mm bolt or a 1/4" x 3" bolt) for each heater unit. - #16 insulated wire wound to make 2 coil layers on the bolt, with wire ends secured and exposed.
- A glass magnetic reed switch, inserted in a plastic tube to prevent breakage, laid parallel to the coil, with wire ends secured and exposed.
- Each heater "hot" wire is attached to one coil wire, and the other coil wire continues to the plus (hot) power.
- The cycle operates as follows:

The reed switch wires are all hooked in parallel. When all the reed switches open, a 12 volt relay is de energized, triggering the delay off device, which turns on the pump for 10 seconds, flooding the heaters and thermostats with cold fuel. This re-closes the heater thermostats, which completes the circuit for the coils also, and thus closes the reed switches. When the heaters heat up and the thermostats re-open, the cycle is repeated.

Installation of Test Units:

1. Mount 3 units max. on a manifold (grounded with one wire to the power supply) inside the Environmental chamber.
2. Hook up one leg of each current sensing coil to a pig-tail, which continues to the plus power supply.
3. Take the other wire of each coil and connect to each individual heater's "hot" wire.
4. The inlet manifold is supplied with -23 [°C] - -10 [°F] fuel by the gear pump and reservoir. There should be a valve before each unit.
5. The exit hoses of each unit can go to another manifold, or go straight back to the reservoir individually.

Test Procedure:

1. Cool down the environmental chamber and test fluid to -23 [°C] - -10 [°F].
2. Turn on power supply.
3. Heaters should all operate. When all the heater thermostats turn off, the pump should turn on, closing the thermostats and cold shocking the heater components. After 10 seconds note the total current draw for an indicator that all units are functioning.
4. Note cycle time and calculate cycles per hour.
5. Twice a day, disconnect the heaters and then cycle each heater one at a time to confirm continued operation.
6. Also note if cycling has stopped. This is an indication that a heater thermostat has become stuck in the closed position.
7. Note before and after the cycles the steady-state current draw of the units individually.

Acceptance Criteria:

A. 5000 cycles without failure, loss in continuity, or change in current draw at 14v.
B. 500 cycles at 18 volts without failure, loss in continuity, or change in current draw at 14 volts.

C. 10 cycles at 24 volts without failure, loss in continuity, or change in current draw at 14 volts

10 PRODUCT ASSURANCE

The manufacturing facility for a particular component or system shall develop an appropriate PPR (Process Planning Review) and PAT (Process Audit Tool), in accordance with the exS US PPA (Process Planning and Audit) manual and the exS Italy program--specific development plan to assure the part meets the quality, durability, and reliability targets throughout the manufacturing process.

Refer to Table A-1 and A-2.

11 WARRANTY RETURNED PARTS TEST AND ANALYSIS PROCEDURES

The product design, development and manufacturing entities shall comply with **PS-11346**, Warranty Returned Parts and Analysis Procedures.

12 ADDITIONAL CONTACTS

Na me / Region	email	Role

13 RELEASE AND REVISIONS

Change level	Date	Description of change
C	12-JAN-2024	S Harmonized Document. Reference number in DocInfo 01446_24_00041

Annex A
(Normative)
Design Verification & Production Validation

Table A-1 - Design Verification & Production Validation

Function	Section #	Sample Size (1)		Acceptance Criteria		Comments & Responsibility
		DV	PV	DV	PV	
ENVIROMENTAL	5	(Note 2)	(Note 2)	Meets Requirement	Meets Requirement	Supplier
Resistance to Corrosion	5.2	15	15	P99C90	P99C90	Supplier
Resistance to Fluids in Engine Compartment	5.3	15	15	P99C90	P99C90	Supplier
APPEARANCE / PHYSICAL / ELECTRICAL / MECHANICAL REQUIREMENTS	6	(Note 2)	(Note 2)	Meets Requirement	Meets Requirement	Supplier
Appearance Requirements	6.1	(Note 2)	(Note 2)	Meets Requirement	Meets Requirement	Supplier
Physical Requirements	6.2	(Note 2)	(Note 2)	Meets Requirement	Meets Requirement	Supplier
Material Requirements	6.2.1	(Note 2)	(Note 2)	Meets Requirement	Meets Requirement	Supplier
Dimensional Requirements	6.2.2	(Note 2)	(Note 2)	Meets Requirement	Meets Requirement	Supplier
Buzz, Squeaks and Rattle Requirements	6.3.1	(Note 2)	(Note 2)	Meets Requirement	Meets Requirement	Supplier
NVH Requirements	6.3.2	(Note 2)	(Note 2)	P99C90	P99C90	Supplier
Connector Requirements	6.4.2	(Note 2)	(Note 2)	Meets Requirement	Meets Requirement	Supplier
Wiring Requirements	6.4.1	(Note 2)	(Note 2)	Meets Requirement	Meets Requirement	Supplier
Electrical Interface Requirements	6.4.3	(Note 2)	(Note 2)	Meets Requirement	Meets Requirement	Supplier
Electrical System Compatibility Requirements	6.4.4	(Note 2)	(Note 2)	Meets Requirement	Meets Requirement	Supplier
Electromagnetic Compatibility (EMC) Requirements	6.4.5	(Note 2)	(Note 2)	Meets Requirement	Meets Requirement	Supplier
Resistance to Electrolysis Of Water-In Fuel Probe	6.4.6	(Note 2)	(Note 2)	P99C90	P99C90	Supplier

Table A-1 - Design Verification & Production Validation

Function	Section #	Sample Size (1)		Acceptance Criteria		Comments & Responsibility
		DV	PV	DV	PV	
Dimensional Check of Fuel Fittings Requirements	6.4.7	(Note 2)	(Note 2)	Meets Requirement	Meets Requirement	Supplier
Water –in-Fuel Signal Level	6.4.8	(Note 2)	(Note 2)	P99C90	P99C90	Supplier
Heater Shut off Test (Automated Heater)	6.4.9	(Note 2)	(Note 2)	P99C90	P99C90	Supplier
FUNCTIONAL REQUIREMENTS	7	(Note 2)	(Note 2)	Meets Requirement	Meets Requirement	Supplier
Filtering Efficiency	7.1	15	15	P99C90	P99C90	Supplier
DHC	7.3	15	15	P99C90	P99C90	Supplier
Outwards Sealing <D>	7.4	15	15	P99C90	P99C90	Supplier
Seal Of Filtering Element Gasket On Dirt / Clean Sides	7.5	15	15	P99C90	P99C90	Supplier
Inner Seal Between Dirt Side/Clean Side (Bubble-Test)	7.6	15	15	P99C90	P99C90	Supplier
Pressure Drop on New Product	7.7	15	15	P99C90	P99C90	Supplier
Filter Cleanliness	7.8	15	15	P99C90	P99C90	Supplier
Filter Element Collapse Test	7.9	15	15	P99C90	P99C90	Supplier
Burst Test	7.10	15	15	P99C90	P99C90	Supplier
Fuel Fitting Torque Test	7.11	15	15	P99C90	P99C90	Supplier
Water Separation Efficiency	7.12	15	15	P99C90	P99C90	Supplier
Functionality of Filter Assembly at Cold Condition	7.13	15	15	P99C90	P99C90	Supplier
Resistance of Filter Assembly at Cold Condition with Presence of paraffin	7.14	15	15	P99C90	P99C90	Supplier
Electrostatic Charger Resistance Test	7.16	15	15	P99C90	P99C90	Supplier
Emulsified Water Separation Test	7.17	15	15	P99C90	P99C90	Supplier

Table A-1 - Design Verification & Production Validation

Function	Section #	Sample Size (1)		Acceptance Criteria		Comments & Responsibility
		DV	PV	DV	PV	
Thermostatically Controlled Heater On/Off Test (Automated Heater)	7.18	15	15	P99C90	P99C90	Supplier
Functionality of NTC Temperature Sensor	7.19	15	15	P99C90	P99C90	Supplier
Fuel temperature measurement accuracy test (with NTC sensor)	7.20	15	15	P99C90	P99C90	Supplier
Functionality of Water in Fuel Sensor	7.21	15	15	P99C90	P99C90	Supplier
SAFETY AND REGULATORY <S>	8	(Note 2)	(Note 2)	Meets Requirement	Meets Requirement	Supplier/ S US (as applicable)
RELIABILITY / DURABILITY <S>	9	(Note 2)	(Note 2)	Meets Requirement	Meets Requirement	Supplier
Resistance to Thermal Cycles	9.3	45	45	R95C90	R95C90	Supplier
Resistance to Pulsating Pressure	9.4	45	45	R95C90	R95C90	Supplier
Resistance to Vibrations	9.5	45	45	R95C90	R95C90	Supplier
Resistance to Fuels (Dynamic Ageing)	9.6	45	45	R95C90	R95C90	Supplier
Heater Life Cycle Test (Automated Heaters)	9.7	45	45	R95C90	R95C90	Supplier

NOTE 1: If provided, the sample size shown is the S US recommended samples per QR.00001, which in conjunction with the analysis method indicated best demonstrates the Acceptance Criteria has been met. The supplier is responsible for meeting the Acceptance Criteria specified and may use other valid sample sizes and analysis methods approved by S US

NOTE 2: Applicable tests, sample sizes and acceptance criteria shall be per requirements specified in each of these sections. If not specified, Release Engineering & Suppliershall define those in the DVP&R

NOTE 3: Engineer shall specify objective or subjective acceptance criteria (Example: P99C90, R95C90, No failure or functional degradation, no physical degradation, etc.) in the DVP&R document (Reference QR.00001)

CONTINUING CONFORMANCE: The Continuing Conformance or CC table below shall include only those tests which are required to ensure on going quality of supplied components. Purpose of CC tests is to identify manufacturing spills before parts leaving the supplier manufacturing locations. Changes resulting from the “Forever Requirements – design or process changes” should not be included.

Table A-2 - Continuous Conformance

Function (1)	Section #	Sample Size	Acceptance Criteria	Frequency
Heater General Performance Requirement	6.4.10.1	3	No Failure	Weekly
Dimensional Check of Fuel Fittings	6.4.7	1 / Cavity	No Failure	Daily
Water-in-Fuel Signal Level	6.4.8	6	No Failure	Weekly
Outwards Sealing <D>	7.4	1	No Failure	100%
Filter Efficiency	7.1	6	No Failure	Quarterly
Dust Holding Capacity	7.3	6	No Failure	Quarterly
Pressure Drop on New Product	7.7	6	No Failure	Quarterly
Burst Test	7.10	6	No Failure	Quarterly
Fuel Fitting Torque	7.11	6	Within Tolerance	Quarterly
Water Separation Efficiency	7.12	6	No Failure	Quarterly
Water Separation Efficiency – Emulsified Water	7.17	6	No Failure	Quarterly
Functionality of NTC Temperature Sensor	7.19	3	Within Tolerance	Daily
Functionality of Water in Fuel Sensor	7.21	3	Within Tolerance	Quarterly

NOTE 1: Above functional tests are in addition to all the in-process functional verifications identified in the Control Plans to prevent potential Design & Process failures.

End of Annex A

Annex B
(Normative)

Recommended Test Flow

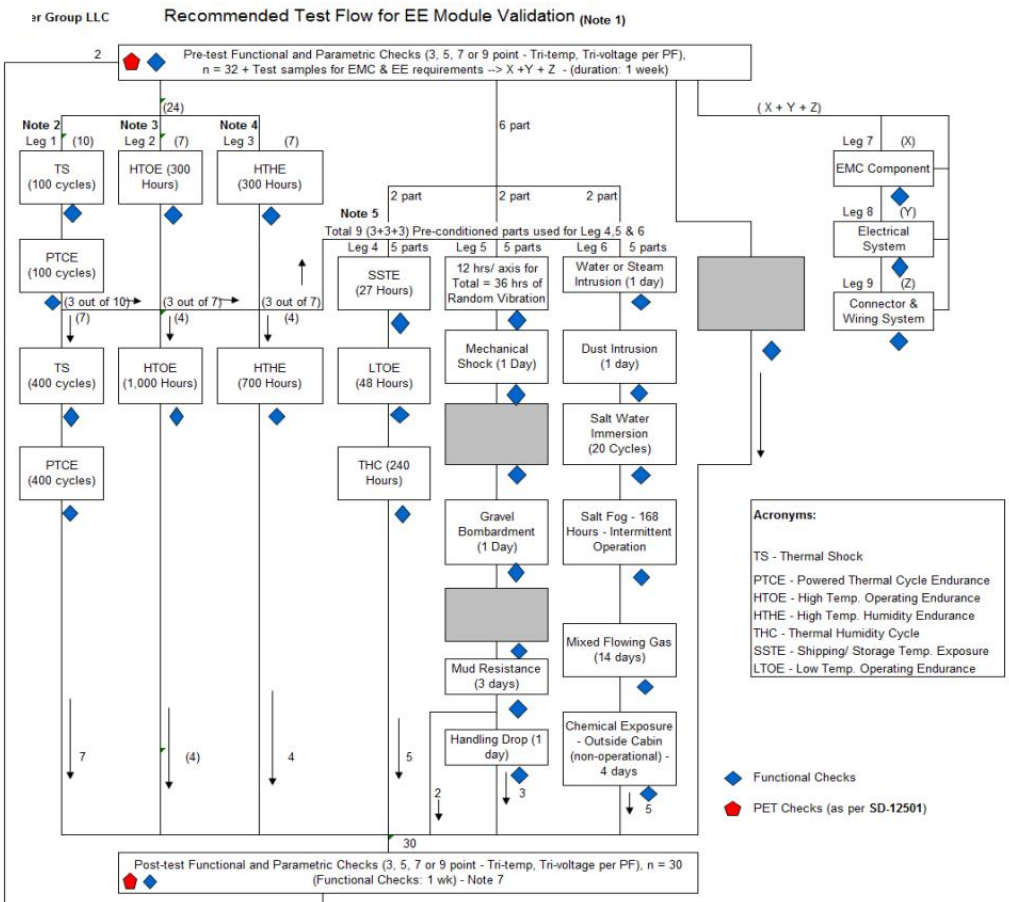

Test will be grayed out if not app

PC Board inspection per CS.00056 for Solder Evaluation (one sample from applicable test legs 1 through 4)

NOTE 1: test flow includes only applicable requirements from the new Environmental Specification CS.00056.Test sequence can be altered within a test leg depending on availability of resources. If the test flow requires editing paste the document in the "HTML format using paste special". Edited file 8test flow) then could be pasted in the word document.

NOTE 2: For test leg 1 – Components with Powertrain (emission) or Passive Safety applications or 200K design life, shall require 500 TS & 500 PTCE cycle. All other application shall require only 300 TS & 300 PTCE cycles. Cycles time depends on soak time (and weight classification).

NOTE 3: Components with Powertrain (emission) or Passive Safety applications or 200K design life, shall require 1,300 hours of HTOE (Ea = 0.7 ,15 years/ 150,000 miles or 15 years /200,000 miles), all other applications shall require only 950 hours of HTOE test (Ea = 0,7 10 years/ 150,000 miles)

NOTE 4: Components with Powertrain (emission) or Passive Safety applications or components packaged outside cabin location or 200K design life, shall require 1000 hours of HTFE (Ea =0.47), for all other applications – 700 hours of HTHE test at 85C/ 85%RH. Alternate test durations are available in Appendix of CS.00056.

NOTE 5: Pre-conditioned samples from leg 1, 2 & 3 shall be used for test legs 4, 5 & 6 (One sample each from leg 1, 2 & 3). 6 fresh part will be added as shown when test leg 2 is required, otherwise 9 parts shall be added.

NOTE 6: Duty cycles for Mech Operating Endurance shall be based on the vehicle design life (10/150K, 15/150K or 15/200K). This test could be separated as special test leg in case of timing bottleneck. If a separate test leg is used to optimize test time, use 1 additional test time, use 1 additional pre-conditioned samples from test legs 1, 2 & 3 for Mech Operating Endurance with 2 fresh samples. Test flow shall be customized separately for this purpose (this is not automatic)

NOTE 7: If there are any failures, detailed root cause analysis (RCA) will be conducted to prevent the failure. Pre-conditioned will not be required for revalidation if the design does not include any PCB layout or components changes. Verification requirements will be determined by S Quality & Engineering base on the RCA

End of Annex B